ESRE-4A2B Series

Safety Relay Expansion Module

Product introduction

ESRE safety expansion module meet the PLe safety level of ISO 13849-1, and is suitable for the expansion of output contacts of safety relay expansion modules in industrial site with high safety requirement. It expands safety switch signal input of upper level into 4 NO safety output contacts and 2NC auxiliary output contacts.

Product feature

- Design according to ISO13849-1 (Category 4, Ple).
- Relay output: 4NO and 2 NC auxiliary contacts.
- Inside circuit with cross-diagnose monitoring function.
- Input power overvoltage protection.
- Power supply reverse polarity protection.
- Visualized status indicator for easy diagnoses.
- Detectable terminal for easy maintenance.
- Standard 35mm width guide mounting design.

Product parameter

Standard level	
Reference standard	ISO 13849-1
Safety level	ISO 13849-1 Category 4/Pl e
Electric parameter	
Power supply	DC24V±10%
Capacity	<3W
Response time	<20ms
Suction buffer time	<50ms
Restart time	<1s
Protective circuit	Overvoltage protection, reverse polarity protection
Safety input	Safety switch signal
Input synchronization	No requirement
Safety output	4NO contacts, and 2 NC auxiliary contacts
B10 data	Rated load: 400,000 times, low load: 2,000,000 times
Contact capacity	AC15：5A/250V; DC13：6A/24V
Electric lifetime	⩾ 100, 000 times (1NO: 5A 250VAC, Resistive load)
Mechanical lifetime	⩾10,000,000 times
Environment	
Vibration resistance	Frequency 10Hz-55Hz, amplitude 0.35±0.05mm, 20 times each in X,Y and Z direction
Impact resistance	Acceleration 10g, pulse duration 16ms, 1000 times each in X, Y and Z direction
Working temperature	-10~+55°C
Storage temperature	-40~+85°C
Storage temperature	Enclosure: IP40 Terminal: Ip20
Installation/ Structure	
Installation	35mm DIN navigation
Wire size	0.2~2.5mm^2
Size	117×100.6×22.5

Model selection (e.g：ESR□-4A2B-E)

Product series	Input type		Output method		
ESR	□	–	4A2B	–	E
	E: safety expansion module		4A2B: 4 normally open, 2 normally close		

Note: ESRE-4A2B-E is suitable for output expansion of safety relays

Safety Relay Expansion Module

Panel function

- Power: power indicator, light on when power on.
- CH1: channel 1 indicates that relay 1 is on when work and off when disconnect.
- CH2: channel 2 indicates that relay 2 is on when work and off when disconnect.
- A1/A2: previous switch signal input terminal.
- Y1-Y2: connect with Y1, Y2 to send back status.
- 12/14, 23/24, 33/34, 43/44: 4 safety output (NO) terminal.
- 51/52, Y1/Y2: 2 auxiliary output (NC) terminal.

Application Details

Safety relay expansion module ESR-4A2B-E supply 4 safety contacts output and 2 auxiliary output in safety circuit. Connect A1 of ESR-4A2B-E to output terminal of the previous device, A2 connected the pole of power supply, when previous device send right signal, the related contacts of expansion module has corresponding action.

Functional diagram

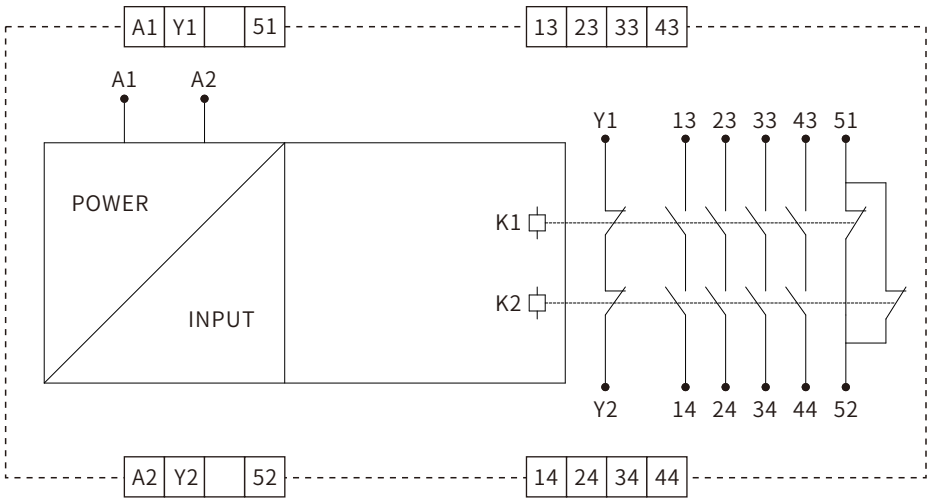

- **Automatic reset**
  ESRE-4A2B: Connect A1,A2 of ESRE-4A2B as diagram, when previous device output active signal, the component works.

- Input circuit output active signal to ESRE-4A2B, K1 & K2 of relay get energized and held, indicator CH1, CH2 light up, safety contacts 13-14/23-24/33-34/43-44 close, and auxiliary Y1-Y2/ 51-52 contacts open.

- **Safety feedback loop**
  Connect YS, Y2 in series to feedback loop of previous device, when a related fault occurs, the safety relay expansion module will not perform the corresponding action.

- The input circuit is disconnected (The input circuit has no valid signal output to the safety relay expansion module), relay K1, K2 are disconnected, indicator light CH1, CH2 are off, safety contacts 13-14/23-24/33-34/43-44 are disconnected, and auxiliary contacts Y1-Y2/51-52 are closed.

Wiring diagram

Typical Application

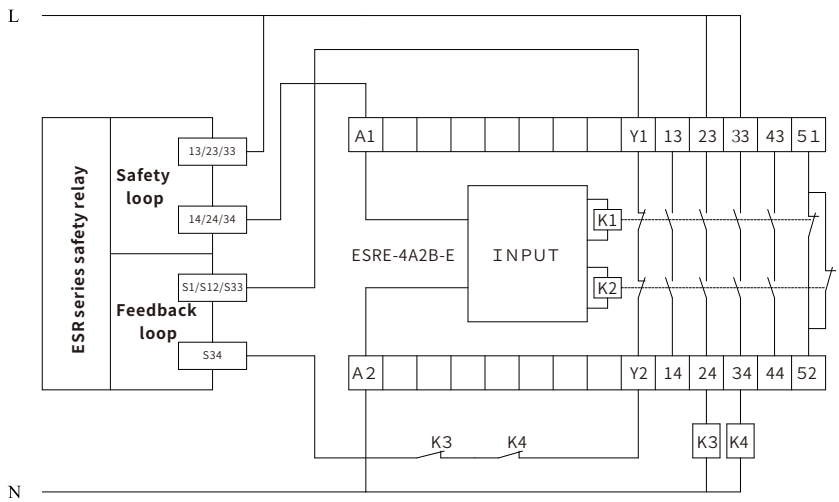

ESRS-3A1B Feedback loop

ESRN/P-2A1B Feedback loop

ESRN/P-3A1B Feedback loop

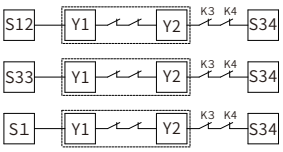

Size diagram

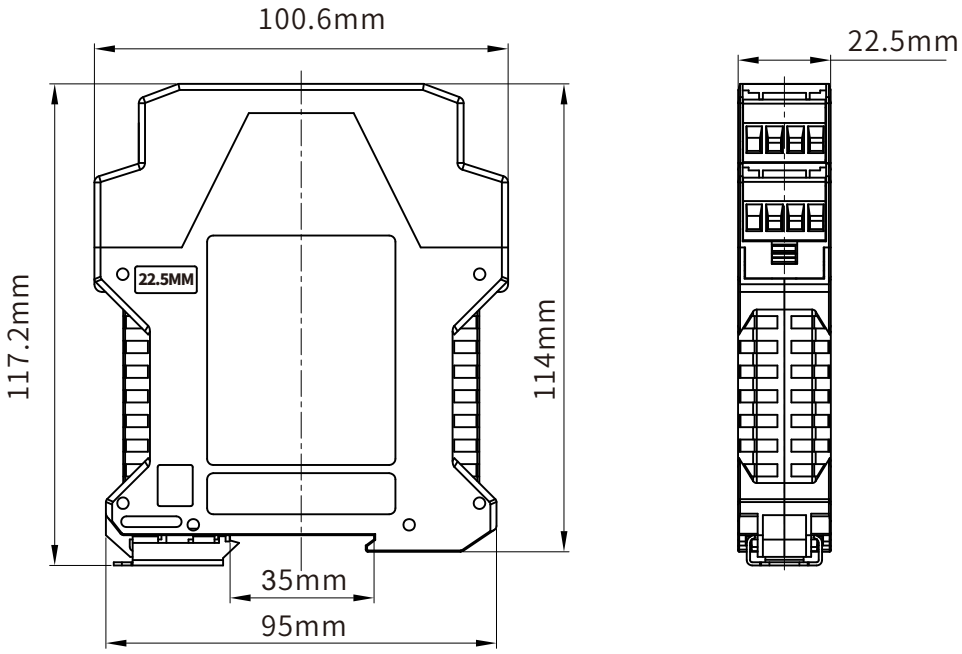

Product Installation

- Please cut off the power supply when mounting, and ensure no dangerous voltage of machine, except the lighting device and spare sockets; Clip the product directly onto 35mm rail inside the equipment cabinet. Before powering on, please check to ensure cable connection is correct and the product is fastened to the mounting rail.
  Before disassembling the product, you must cut off the power supply to the machine, then loosen the locking screws or remove terminals.

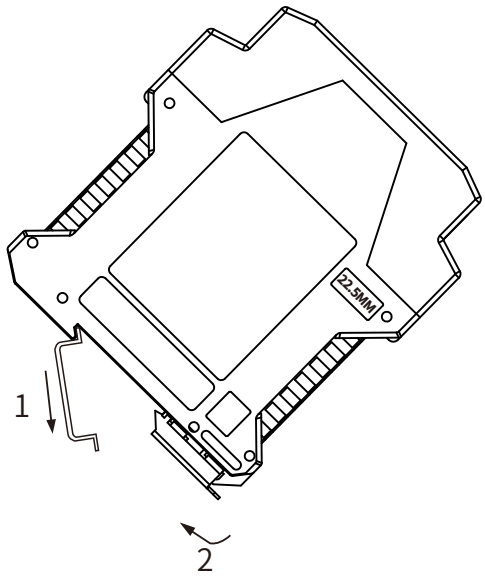

Installation diagram

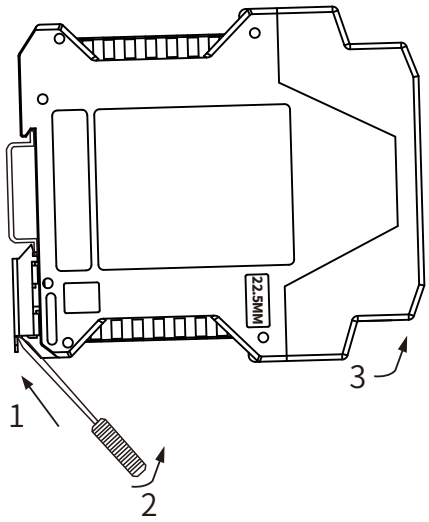

Removal diagram

Carefully read the manual before installation, and ensure power supply is cut off when wiring.
Wiring with power is prohibited.